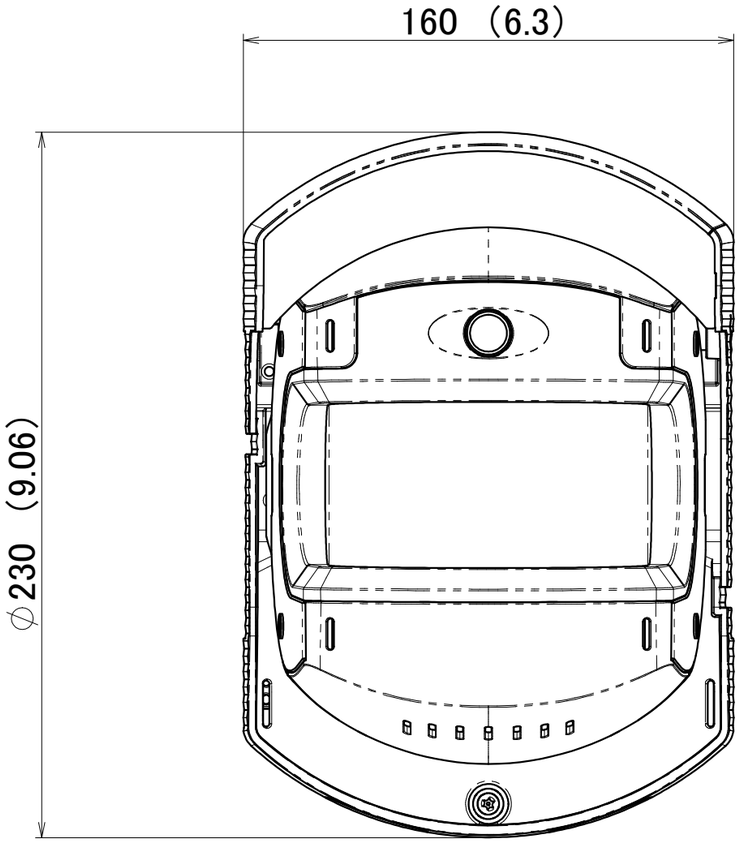
160 (6.3)
∅230 (9.06)

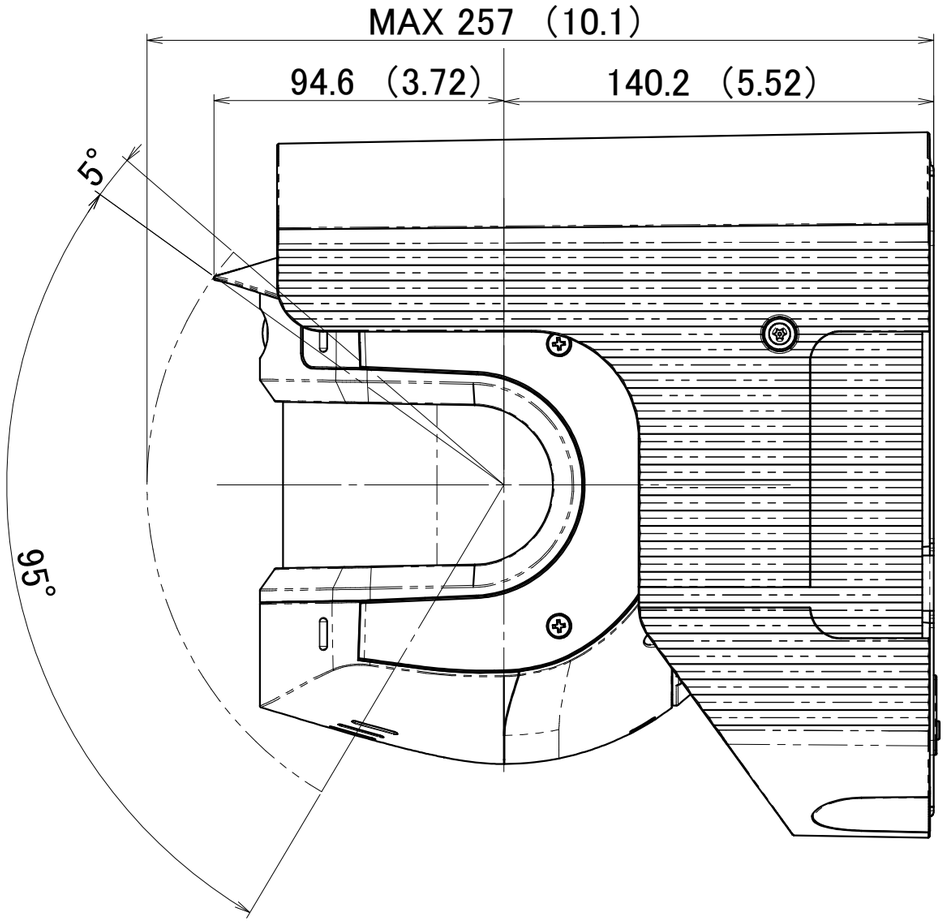
MAX 257 (10.1)
94.6 (3.72)
140.2 (5.52)
5°
95°

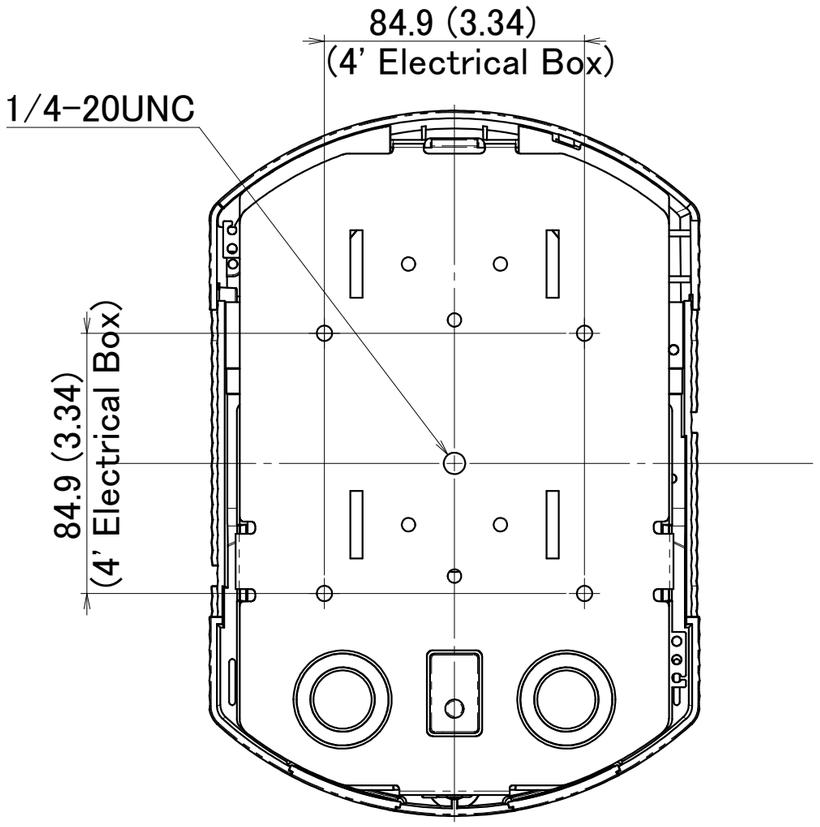
84.9 (3.34)
(4' Electrical Box)
1/4-20UNC
84.9 (3.34)
(4' Electrical Box)