(UL) 59-2408-4 1703-01
NO. 59-2408-6

OPTEX

INSTALLATION INSTRUCTIONS

Laser Scan Detector
RLS-2020S
RLS-2020I

REDSCAN mini

EN

SECURITY UL LISTED CE

RLS-2020S	Indoor/Outdoor model
RLS-2020I	Indoor only

FEATURES

- 20 x 20 m (65 x 65 ft.), 95 degrees detection area
- Vertical and Horizontal detection area
- Multi-angle Adjustment Shell Structure (M.A.S.S.)
- Automatic area setting function
- Advanced area setting
- 4 adjustable detection areas on IP connection
- Total 3 outputs can be assigned for analog connection
- Anti-masking, Anti-rotation, Soiling, Device trouble, Tamper output (selectable)
- Paintable housing
- Supporting multiple network protocols

RLS-2020S
- Indoor and Outdoor use
- Indoor high resolution mode
- Indoor throw-in mode
- Area selection
- Environmental disqualification circuit (DQ)

CONTENTS

1 INTRODUCTION

1-1 PREPARATION

- Read this instructions carefully prior to installation.
- This instructions uses the following warning indications to provide information regarding correct usage of the product to prevent harm and damages to assets. These warning indications are described below.
  Ensure these precautions before reading the rest of this instructions.

⚠Warning	Failure to follow the instructions provided with this indication and improper handling may cause death or serious injury.
⚠Caution	Failure to follow the instructions provided with this indication and improper handling may cause injury and/or property damage.

⃠ This symbol indicates prohibition.
The specific prohibited action is provided in and/or around the figure.

❗ This symbol requires an action or gives an instruction.

The check ✔ mark indicates recommendation.

⚠ Warning	
This product is not a safety component as per the machinery directive. Do not use it for the purpose of machine safety.	⃠
Do not touch the unit base or power terminals of the product with a wet hand (do not touch when the product is wet with rain, etc.). It may cause electric shock.	❗
Never attempt to disassemble or repair the product. It may cause fire or damage to the devices.	⃠
Do not exceed the voltage or current rating specified for any of the terminals, doing so may cause fire or damage to the devices.	⃠
Ensure the power is turned off before wiring.	❗
Confirm the type of each terminal to ensure wiring is carried out correctly.	❗
Whenever a commercial switching regulator is used, be sure to connect PE (Protective Earth Terminal).	❗
Hold the main unit securely when you install or service it. Exercise care not to bump the product against nearby objects or drop it inadvertently.	❗
This product is not capable of detecting objects in the dead zone of the laser scan. Do not use this product for an application where it is not capable of covering the detection area required by the task.	⃠
Please note that the product can malfunction, including producing an irregular output and committing a detection error, if it is exposed to unfavorable environmental conditions such as strong ambient light, electronic noises or mechanical vibrations.	❗
⚠ Caution	
Use of controls or adjustments or performance of procedures other than those specified herein may result in hazardous radiation exposure.	❗
Clean and check the product periodically for safe use. If any problem is found, do not attempt to use the product as it is.	❗
When disposing of this product, be sure to follow the waste-disposal regulations of the country or region where it is used.	❗
This product is intended to detect an intruder(s) and is not designed to prevent theft, disasters or accidents. The manufacturer shall not be held liable for any damage to user's property resulting from theft, disasters or accidents.	

1-2 PRECAUTIONS

Install the product only on a solid surface.
Do not install the product on an uneven surface.

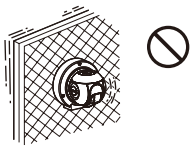

Avoid mounting near vents or devices which cause high levels of smoke or condensation.

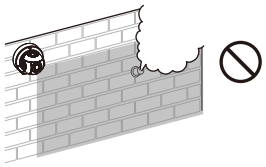

Install the product so that the detection area is not influenced by interference from tall grass or tree branches waving in the wind.

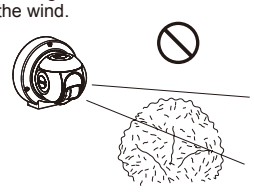

Do not install or leave the product in a location exposed to heat, vibrations or impacts.

Do not use the product in an environment where solvent fumes or corrosive gases are present.

Do not use this product in environments where there may be oil mist particles which may contaminate the window of the detector; thus causing detection errors and possible corrosion which may lead to product failure.

There should not be any obstructs (e.g. lighting equipment, fire detectors, cameras, poster, etc.) in the laser area.

After installation, any obstructs should not be carried/moved into the detection area.

Cleaning the Product

Clean the laser window using a damp cloth.
A smeared laser window can limit the detection area due to the reduced laser sensitivity. In addition, heavy soiling of the window can induce detection errors.

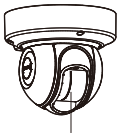

On Safety of Laser

This product is categorized as a Class 1 product in terms of the Safety Standard.

Average Power	: Max. 0.021 mW (AEL)
Wavelength	: 905 nm
Pulse Width	: 4 ns
Emission period	: 35 μs
Standard	: IEC 60825-1

Class 1 of the Laser Safety Standard means that the safety of laser products belonging to this class is warranted under normal operating conditions (reasonably predictable operating conditions). The product is marked to indicate that it is laser equipment. No additional safety measures are necessary.

Complies with 21 CFR 1040.10 and 1040.11 except for deviations pursuant to Laser Notice No.50, dated June 24, 2007.

Class 1 laser product

Do not expose your eyes directly to the laser beam

CE Statement

Warning: This is a class A product. In a domestic environment this product may cause radio interference in which case the user may be required to take adequate measures. (EN 55032)

1-3 PARTS IDENTIFICATION

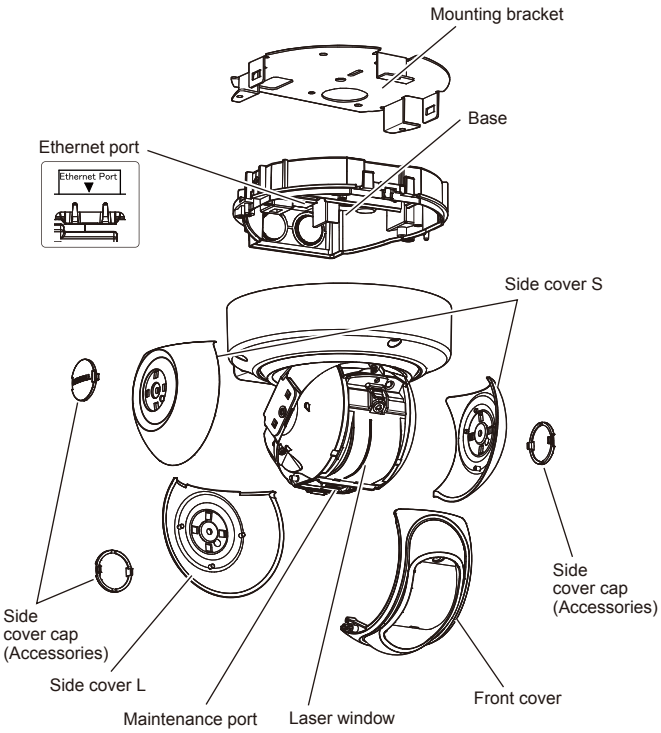

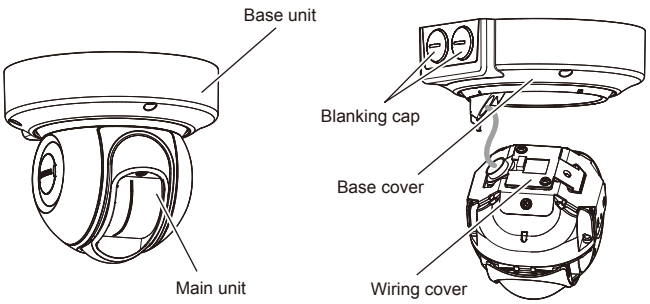

Accessories >>

Allen key: x1 | Side cover cap: x3 | Wall packing: x1 | Cable gland: x1 | Paper template: x1

1-4 DETECTION AREA

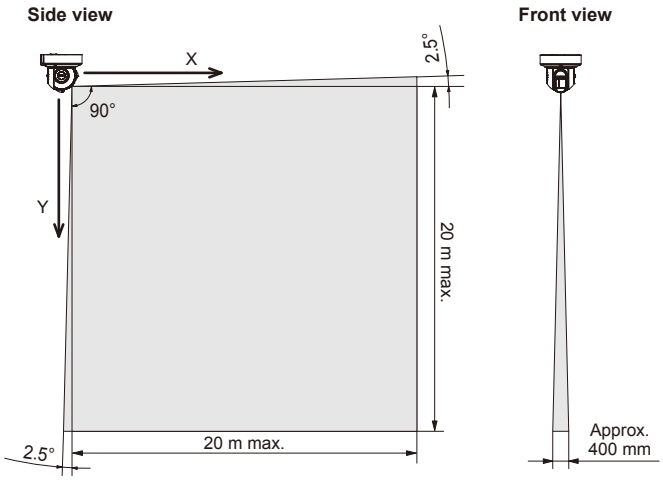

1-5 INSTALLATION WORK FLOWCHART

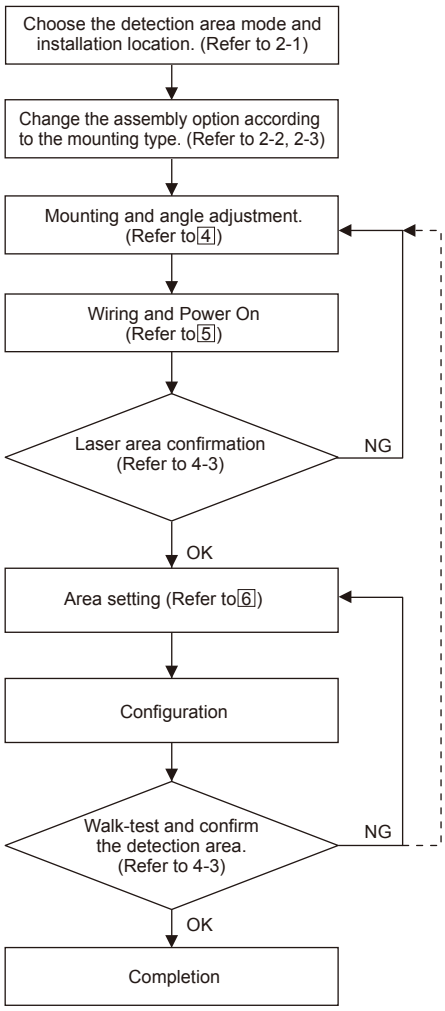

2 MOUNTING TYPE AND ASSEMBLY OPTIONS

2-1 MOUNTING TYPE

RLS-2020 has type A, B, C, and D to be installed.
Select the correct type of assembly to match the installation.

The detection area should cover the intruders approach.

↓

Which detection area is appropriate, Vertical or Horizonrtal?

Vertical Detection Area

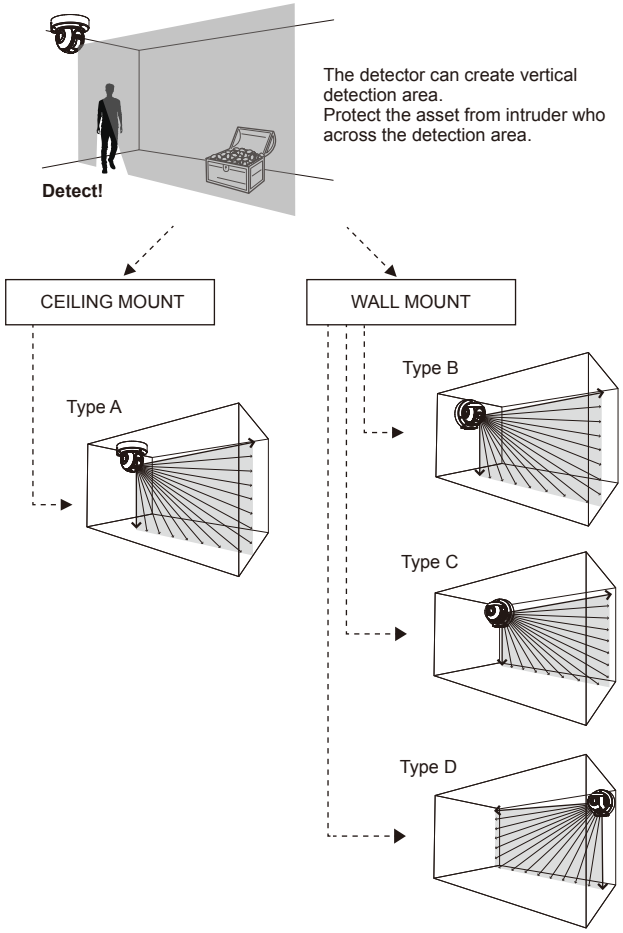

Horizontal Detection Area

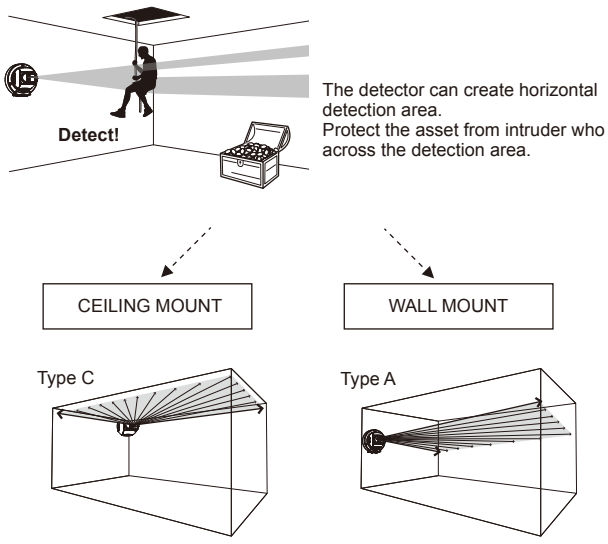

-Type A

• Vertical area for ceiling mount

• Horizontal area for wall mount

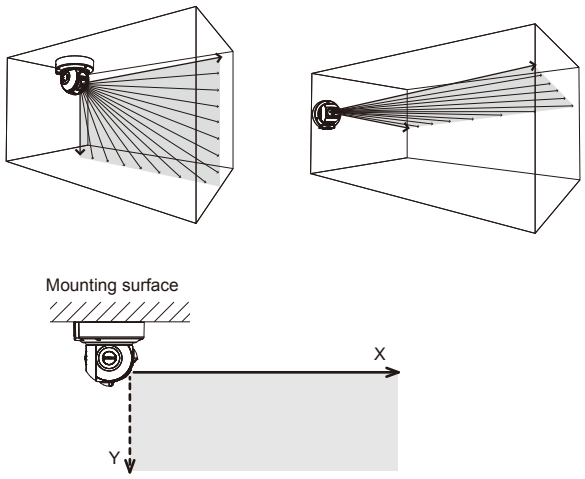

-Type B

• Vertical area for wall mount

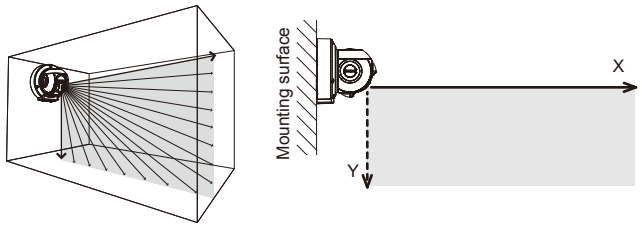

-Type C

• Vertical area for wall mount at the left corner

• Horizontal area for ceiling mount

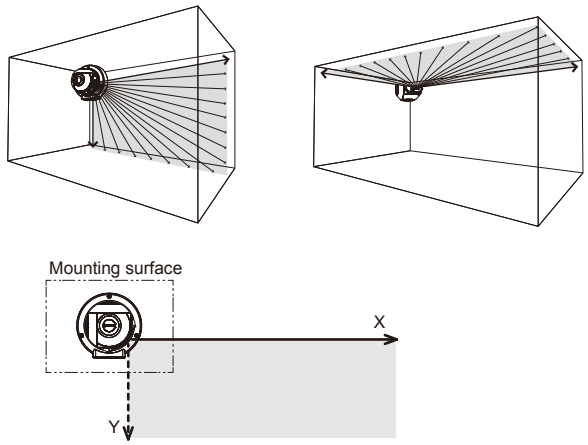

-Type D

• Vertical area for wall mount at the right corner

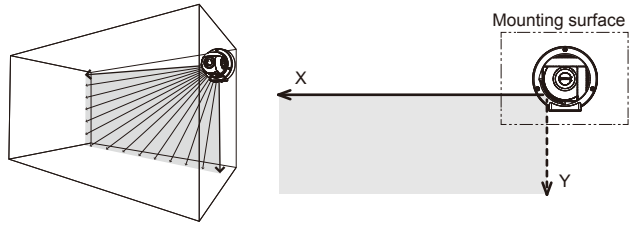

Caution >>

For the vertical detection area to the mounting surface, be sure that the fixing screw of the front cover is placed on top.

2-2 DISASSEMBLY

Note >>
Disassembling is not required to use type A. (factory default)

Disassemble the following parts in preparation.

1 Remove the side cover caps, side cover (L) and side covers (S).

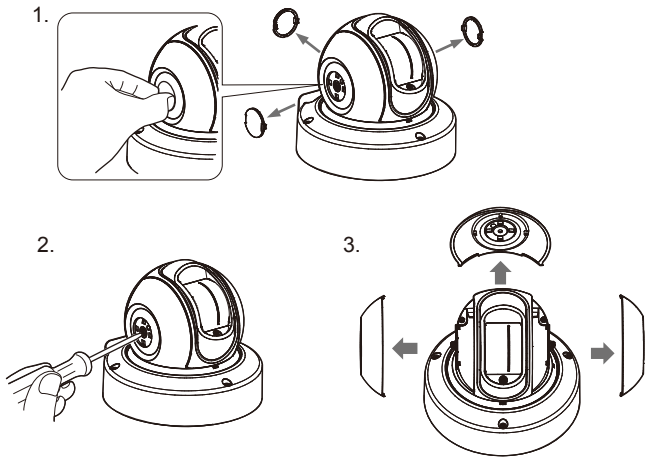

2 Loosen 3 screws and remove the base.

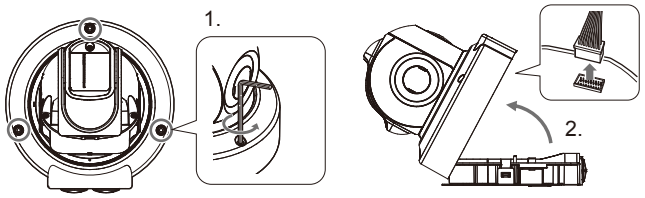

3 Turn over the unit and remove the screw at the center.

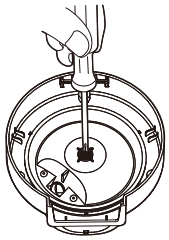

4 Remove the base cover.

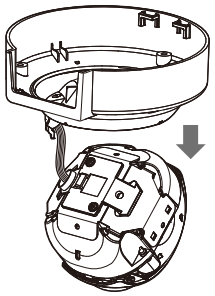

Caution >>
Do not apply loads to the wiring.

2-3 ASSEMBLY OPTIONS

-Type A (Default)

Follow the procedure below to return to type A from other mounting types.

1 Rotate the main unit and insert the hook of the base cover into the position where the letter "A" is written on the wiring cover.

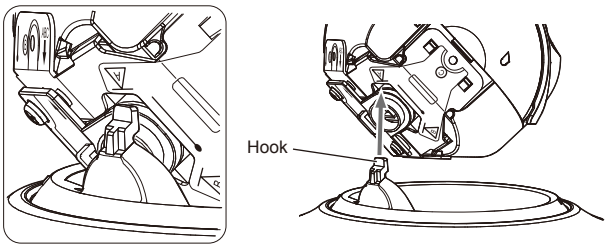

Note >>

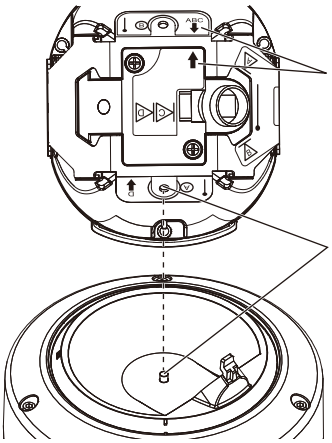

2 Turn over the unit and adjust the position of the screw hole, and tighten the screw at the center.

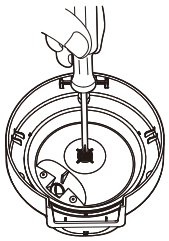

3 Mount the side cover L, side cover S and side cover cap.

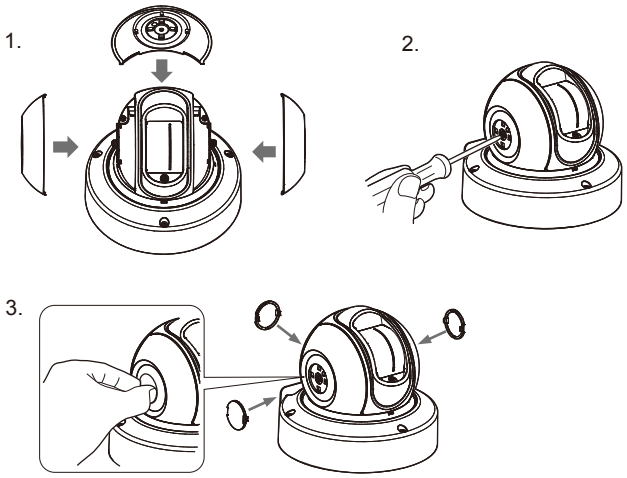

Note >>
Mount the cover caps and the logo must be displayed horizontally.

Note >> The positions of the fixing screw and side cover are shown below.

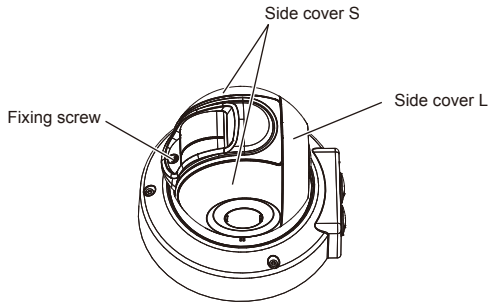

-Type B

1 Rotate the main unit and insert the hook of the base cover into the position where the letter "B" is written on the wiring cover.

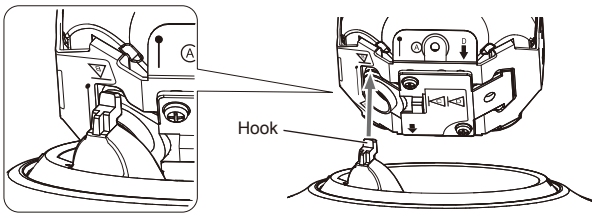

Note >>

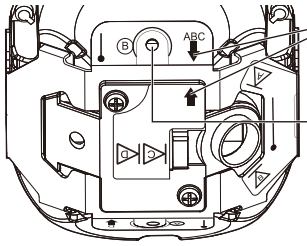

Before assembling, confirm the arrow mark on the wiring cover and the same with ABC on the main unit face each other.

Then, place the main unit on the base unit, so as to match the screw hole of the main unit and the one at the center of the base cover as indicated.

2 Assemble parts just as step 2 to 3 for type A.

Note >> The positions of the fixing screw and side cover are shown below.

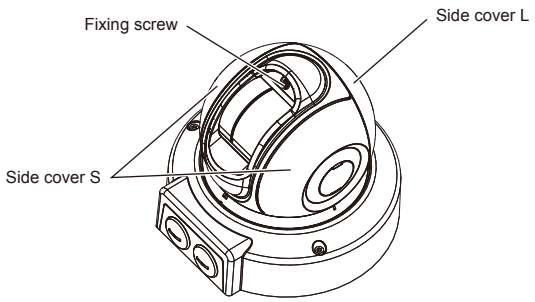

-Type C

1 Rotate the main unit and insert the hook of the base cover into the slot of the wiring cover.

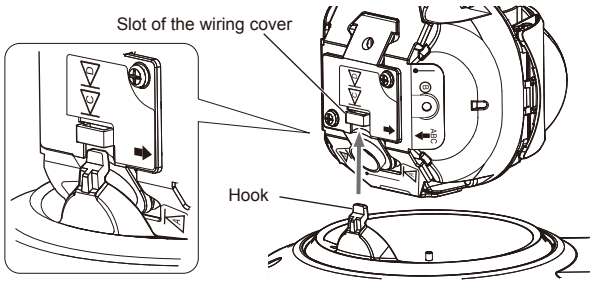

Note >>

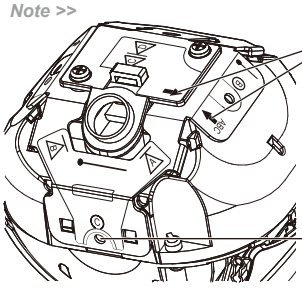

Before assembling, confirm the arrow mark on the wiring cover and the same with ABC on the main unit face each other.

Then, place the main unit on the base unit, so as to match the screw hole of the main unit and the one at the center of the base cover as indicated.

2 Assemble parts just as step 2 to 3 for type A.

Note >> The positions of the fixing screw and side cover are shown below.

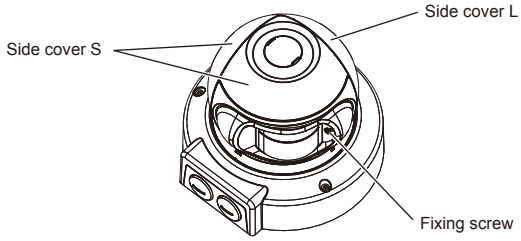

-Type D

1 Loosen 2 screws and remove the wiring cover.

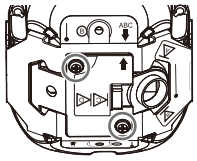

2 Rotate the wiring cover by 180 degrees and replace it.

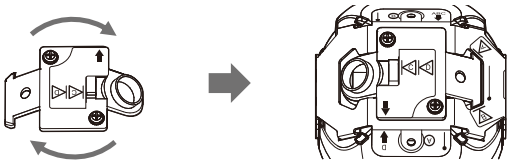

3 Rotate the main unit and insert the hook of the base cover into the slot of the wiring cover.

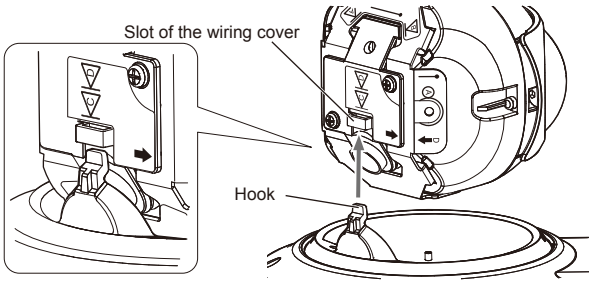

Note >>

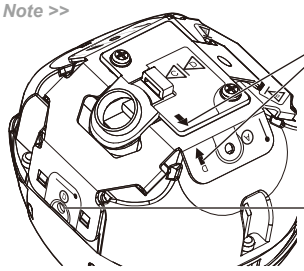

Before assembling, confirm the arrow mark on the wiring cover and the same with D on the main unit face each other.

Then, place the main unit on the base unit, so as to match the screw hole of the main unit and the one at the center of the base cover as indicated.

4 Assemble parts just as step 2 to 3 for type A.

Note >> The positions of the fixing screw and side cover are shown below.

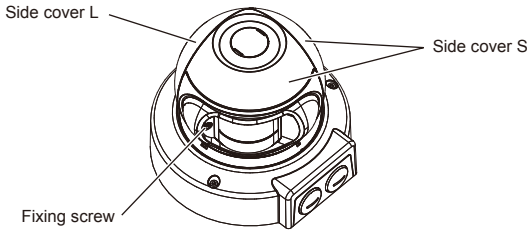

3 BEFORE INSTALLATION

3-1 REMOVING THE FRONT COVER

1 Loosen the screw on the front cover and pull the front cover forward with a snap.

2 Rotate the front cover at opposite side of the screw upward and remove the hooks (x2).

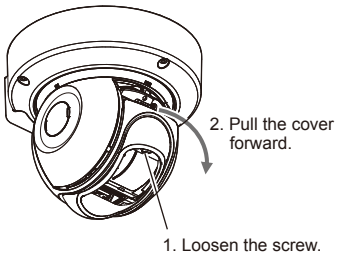

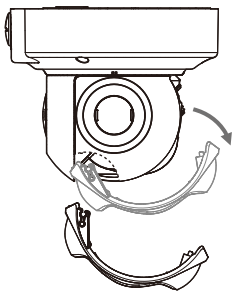

Note >>
The procedure to open the front cover is required when connecting the LAN cable to the maintenance port. (refer to 5-6)

3-2 MOUNTING THE FRONT COVER

1 Snap the front cover into the main unit.

2 Tighten the screw.

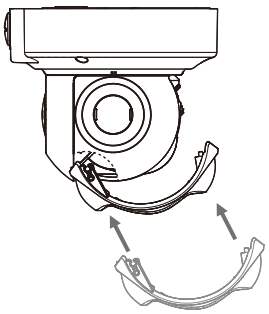

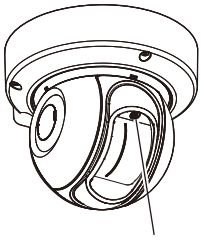

3-3 REMOVING THE LASER WINDOW

As shown in the figure below, use the supplied allen key to put out the hook upward in a leverage motion.

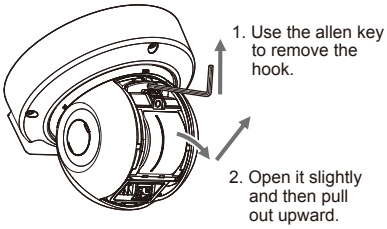

Note >>
The laser window needs to be removed when pressing the reset button or replacing it.

Caution >>
Be sure to turn OFF the power supply when mounting or removing the laser window.

Caution >>
Do not touch the laser window exept it's frame.
Do not touch inside.

3-4 MOUNTING THE LASER WINDOW

As shown in the figure below, insert the foot of the laser window until it clicks.

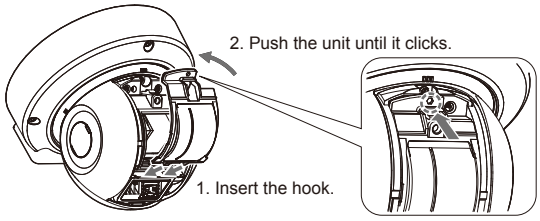

Caution >>
Be sure to turn OFF the power supply when mounting or removing the laser window.

3-5 WIRING CABLE ENTRY

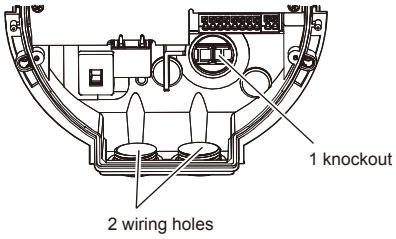

-Wiring hole on the back side

Use a screwdriver to open a knockout.

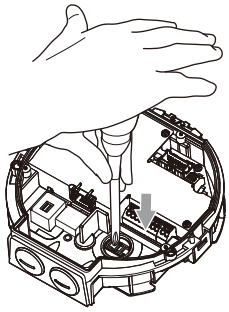

Caution >>
Be sure to open a knockout to the downward direction.

Note >>
When performing wiring on the back side, Apply the supplied packing on the depression on the back side of base.

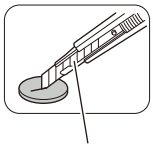

Make a slit with a cutter.

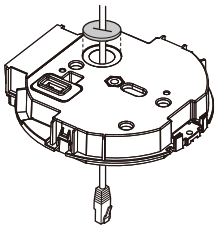

Pass the wiring through the slit of the packing.

-Wiring hole on the side

Remove the blanking caps of the wiring holes on the side using a tool such as a coin.

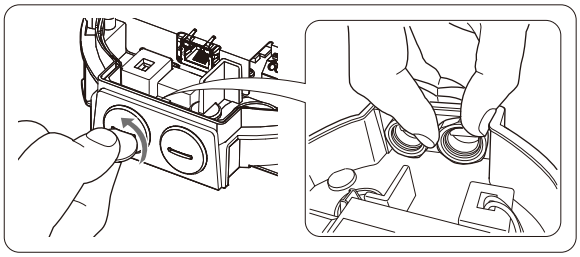

1.

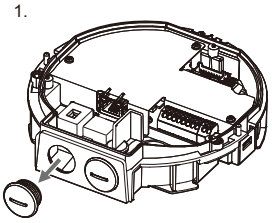

2.

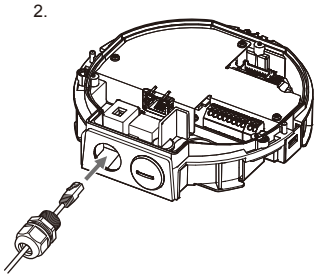

3-6 INSTALLING NETWORK CABLE

1 Disassemble the cable gland.

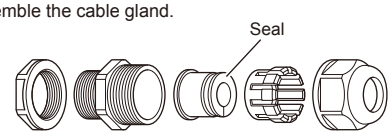

2 Pass the Ethernet plug with the correct order and direction. Put the seal from the side.

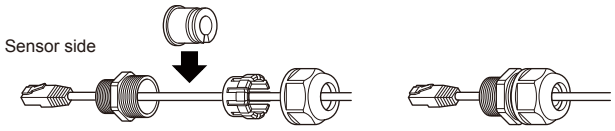

Caution >>
The LAN cable with the cover on cannot passes through the cable gland.
Be sure to remove the cover before use.

Caution >>
Do not install the cable gland upward than horizontal line. Doing so may reduce the waterproof performance.

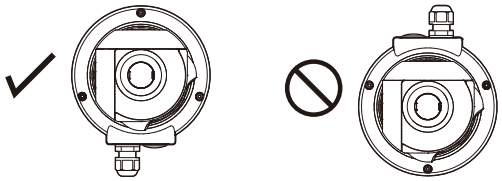

4 INSTALLATION AND ANGLE ADJUSTMENT

4-1 WALL OR CEILING MOUNTED

Methods for ceiling mounting and wall mounting are the same.

1 Remove the mounting bracket from the base, using a tool such as flathead screwdriver.

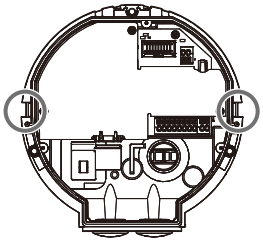

2 Place the supplied paper template on the mounting surface and open 2 mounting holes.

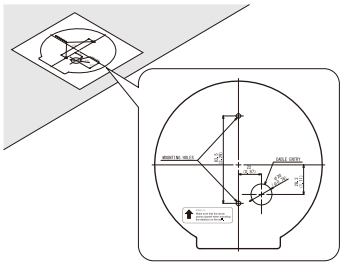

Note >>
Make sure that the arrow points upward when mounting the detector on the wall.

3 Mount the mounting bracket to the mounting surface.
Screws to fix the mounting bracket are not included.

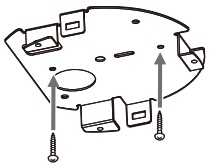

Note >>
4 mm / No.8
3.5 mm max.
Φ9.5 mm max.

4 Attach the base into the mounting bracket until it clicks.

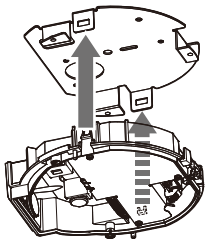

Note >>
Pull the base to make sure that the base is completely attached.

5 Perform wiring. (See 5-1.)

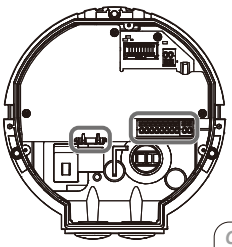

6 Connect the base and main unit with wiring. When the LED at the side of the relay connecter is ON, turn OFF the power supply before connecting them.

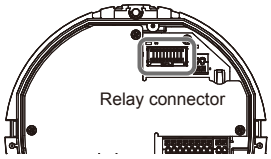

Caution >>
Do not supply the power for this unit during wiring.

7 Insert the base hook in to the base cover and ensure that the fixing screw does not jam against the cover.
Close the base cover, and then tighten the 3 screws to fix it.

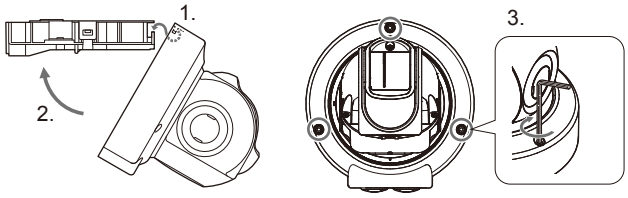

4-2 ANGLE ADJUSTMENT

1 Slightly loosen 3 fixing screws.

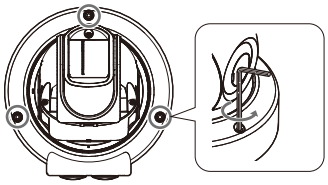

2 Use the laser area checker to adjust the angle and then tighten 3 fixing screws.

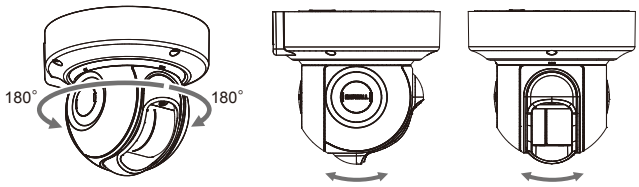

±180° horizontally

Approx. 4° virtically and horizontally

Note >>
Align the markings of the base unit and main unit to be the guideline for the direction of the detection area.

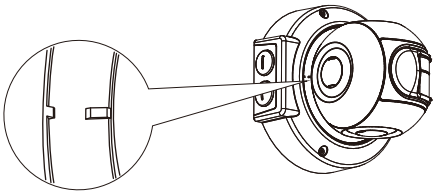

4-3 LASER AREA CONFIRMATION

It is recommended that the optional Laser Area Checker(LAC-1) is used to confirm the location of the laser plane.

-Vertical Detection Area

1 Adjust the detector's angle so that the laser beam hits the farthest position of the required area and just the bottom of the detector.

2 Check that the entire area is covered properly with laser area checker (option: LAC-1).

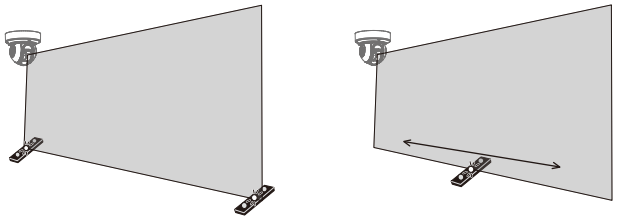

-Horizontal Detection Area

Check that the laser beams are targeted to the desired areas.
Tips: Two units of LAC-1 (option) can make it easier to confirm the detection area.

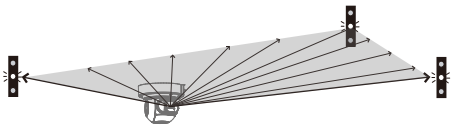

Note >>
For detailed instructions refer to the LAC-1 instruction manual.

5 PARTS LAYOUT INSIDE AND THEIR FUNCTIONS

5-1 WIRING

Inside the base

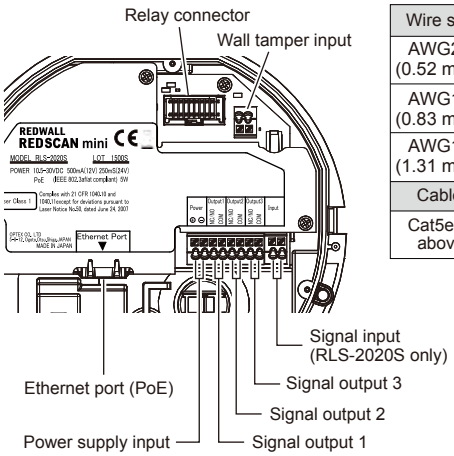

The length of the power wire must be less than the figures listed below.

Wire size	12VDC	24VDC
AWG20 (0.52 mm²)	30 (100)	790 (2590)
AWG18 (0.83 mm²)	50 (160)	1260 (4130)
AWG16 (1.31 mm²)	80 (260)	2000 (6560)
Cable	PoE (IEEE802.3 standard)	
Cat5e or above	100 (320)	

m (ft)

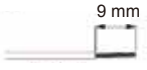

Stripping length

Strip the cover of the wiring about 9 mm.

Note >>
Some PoE netwok switches have a limit for wattage. Connect the detectors to PoE network switches without exceeding the limit referring to their instructions.

* As for wiring for UL application, refer to UL statement on the end of page 11.

5-2 PROGRAMMABLE SIGNAL OUTPUT

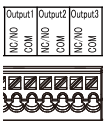

The three output terminals can be configured as NO/NC. They are however fixed as open when the unit is not energized. The outputs are programmable from options below.

Alarms
- Master alarm (MO)
- Zone alarm (A1, A2, B1, B2)

Troubles
- Anti-masking (AM)
- Anti-rotation (AR)
- Soiling (SO)
- Environmental disqualification (DQ)
- Device trouble (TR)
- Tamper output (TA)

5-3 PROGRAMMABLE SIGNAL INPUT (RLS-2020S only)

Programmable input can be used for the following functions.

- Signal Output 1 for confirmation of the function
- Signal Output 2 for confirmation of the function
- Signal Output 3 for confirmation of the function

*Refer to UL statement on the end of page11

When the signal input is closed, the signal output (1 to 3) responds as change the status of output. It can be used for confirmation that the detector is operated properly.

- Switching to Next Masking / Allocating file
  When the signal input is closed, the unit changes Masking/Area Allocation pattern files. e.g. File 1 to File 2, File 2 to File 3, File 3 to File 4 and File 4 to File 1... It can be used for switching Masking/Allocation pattern remotely without REDSCAN Manager.

- Area Set
  When the signal input is closed, Area set is started. It can be used for re-creating the detection area without REDSCAN Manager.

For settings this function, the dedicated software, REDSCAN Manager is required. If signal input is closed shorter time than the judgement time (Default 1 sec., adjustable range 1 to 10 sec), it will be ignored.

5-4 ETHERNET PORT (PoE)

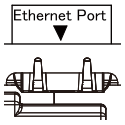

The Ethernet port inside the base is for constant connection. PoE is supported.

Default
IP address : 192.168.0.126
Subnet mask : 255.255.255.0
Default gateway : 192.168.0.1

Note >>
Do not use the same subnet for the main Ethernet port and the Maintenance port.

5-5 MAINTENANCE SECTION

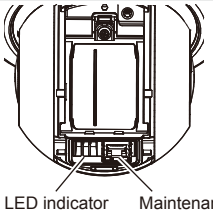

Note >>
At a maintenance port, Use a light LAN cable for indoor use. (Do not use the heavy LAN cable for exterior use.)
This port is for maintenance purpose.
After maintenance, re-assemble the front cover.

5-6 MAINTENANCE PORT

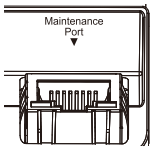

The Ethernet port on the maintenance section is connected only for initial set-up. Do not use it for constant connection.

Default
IP address : 192.168.1.126
Subnet mask : 255.255.255.0

Note >>
Do not use the same subnet for the main Ethernet port and the Maintenance port.

5-7 POWERING ON

Enter the DC power to the power supply input terminal.
Or, connect PoE power supply equipment to the ethernet port (PoE)
After power on, all the indicators are turned on for approx. 60 seconds and then the status and alarm indicators are turned off.
During this period, REDSCAN mini itself performs initial settings.

5-8 INITIALIZATION TO FACTORY DEFAULT

1. Turn Off the power supply. Remove the front cover and laser window. (refer to 3-1,3-3)
2. Power On while pressing the reset button.
3. All LEDs turn On. Red LED turns Off after 50 sec, and green LED turns Off after 2 sec. And then, release the reset button. Yellow LED turns off after 3 sec.
4. Turn Off the power supply. Attach the laser window and the front cover. Then, Power On.

5-9 LED INDICATOR

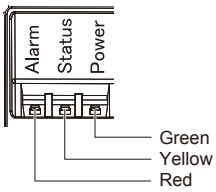

Blink Light OFF

Detector condition	LED	
Warm-up (apprpx. 60 s)	◉ ◉ ◉	
Stand-by	○ ○ ◉	
Alarm	◉ ○ ◉	
Anti-masking	*◉ ○ ○	○ ○ ◉ Green blinks once. → ○ ◉ ○ Yellow blinks once. REPEAT
Anti-rotation		○ ○ ◉ Green blinks once. → ○ ◉ ○ x 2 Yellow blinks twice. REPEAT
Soiling		○ ○ ◉ Green blinks once. → ○ ◉ ○ x 3 Yellow blinks 3 times. REPEAT
Environmental disqualification (DQ)		○ ○ ◉ Green blinks once. → ○ ◉ ○ x 4 Yellow blinks 4 times. REPEAT

* According to alarm status.

Trouble condition	LED
Motor error	○ ○ ◉ Green blinks once. → ◉ ○ ○ Red blinks once. REPEAT
Hardware error	○ ○ ◉ Green blinks once. → ◉ ○ ○ x 2 Red blinks twice. REPEAT
Over heat	○ ○ ◉ Green blinks once. → ◉ ○ ○ x 3 Red blinks 3 times. REPEAT
Others (not fixed the laser window properly, etc.)	○ ○ ◉ Green blinks once. → ◉ ○ ○ x 4 Red blinks 4 times. REPEAT

6 SETTING

6-1 OVERVIEW

There are two options to setup the unit with WEB browser for simple setting and optional setup software, Redscan Manager software for advanced configuration. This instructions mention for the setting with WEB browser. For setting with Redscan Manager, please refer to the help of the software.

A web browser can be used to configure the Redscan mini settings.
The ethernet port on the base unit and the maintenance port on the main unit can be used for configuration.
The main port is for the operation and settings, the maintenance port is for settings by web browser or REDSCAN Manager.

Recommend web browser: Chrome.

< Default setting >

Main Ethernet port IP address	: 192.168.0.126
Subnet Mask	: 255.255.255.0
Default gateway	: 192.168.0.1
Maintenance port IP address	: 192.168.1.126
Subnet Mask	: 255.255.255.0
MTU	: 1500
ID	: REDSCAN
Password	: OPTEX

When connected, the start page appears:

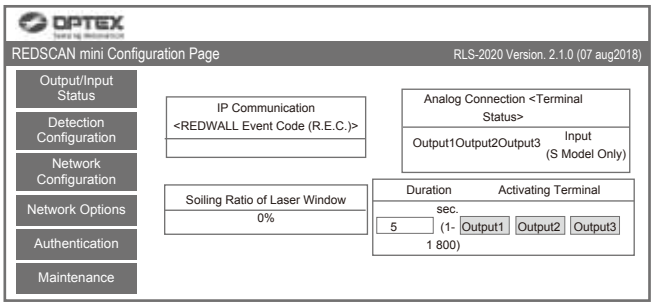

Described below are menu displayed on the screen left:

- **Output/Input Status**
  Indicates statuses of the device output/input, REDWALL Event Code and Soiling ratio of laser window. Outputs can be triggered manually.
- **Detection Configuration**
  Configures detection settings.
- **Network Configuration**
  Configures network settings.
- **Network Options**
  Configures network options.
- **Authentication**
  Configures user ID and password.
- **Maintenance**
  Shows MAC address and licences. Updates firmware and reboots the unit.

6-2 DETECTION CONFIGURATION

The following setting items can be configured. Use pull-down menu or enter a value. Items that are unavailable for setting are grayed out, depending on a model or mode.

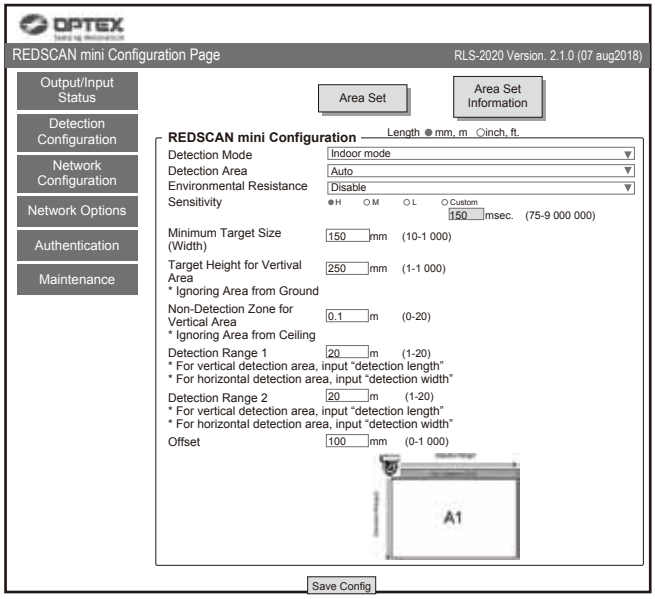

- **Area Set**
  After installation and angle adjustment of the laser beam, press this button before starting the setting adjustment. The unit learns background and adjusts detection area. No human body must enter the area to be configured as a detection area. Otherwise the area may not be configured properly.
- **Area Set Information**
  To indicate the date of area setting.
- **Save Config.**
  Transfers and saves the setting configured on the browser. Press this button after configuring the setting.
- **Detection Mode** *Refer to UL statement on the end of page 11.
  Four modes are available:

  [Indoor mode] (RLS-2020I and RLS-2020S)
  For general indoor applications. (Default)
  Can make vertical detection area or horizontal detection area according to the mounting direction.

  [Outdoor mode] (RLS-2020S only)
  This option can be selected for general outdoor applications.
  In this mode, the special algorism works to reduce false alarms by weather conditions (e.g. rain, snow and fog).
  In order to reduce the false alarms under harsh environment, the environmental resistance function can be set as enable.

  [Indoor high resolution mode] (RLS-2020S only)
  By increasing detection resolution, the unit can detect small object at longer distance. In regular indoor mode, the resolution is 0.25 degree.
  In this high resolution mode, it gets 0.125 degree.
  Thus, the same small size object can be detected at the double distance. But, fastest response time can be within 100 ms in this mode, the unit may not detect fast movement object. This mode shall be use for only indoor application.

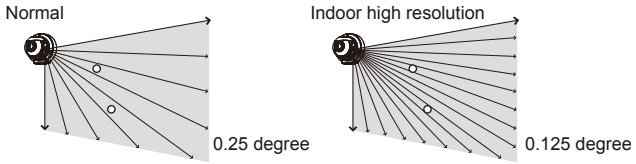

  [Indoor throw-in mode] (RLS-2020S only)
  This mode can work to detect the object which is thrown into the detection area.
  Response time is the minimum within 25ms.
  This mode shall be use for only indoor application.

- **Detection Area**
  Three options are available:

  [Horizontal]
  Creating a detection area in parallel with the ground, such as ceiling protection.

  [Vertical]
  Creating a detection area perpendicular to the ground, such as wall protection.

  [Auto] (Default)
  For automatic selection by a sensor direction.

- **Environmental Resistance (RLS-2020S only)**
  Erroneous reports under a bad environment such as a fog can be reduced when outdoor mode is selected.

  [Disable]
  Configure this when a report without a delay is required for an application of PTZ camera linkage.
  This setting may cause an erroneous report under a bad environment such as a fog or snow.

  [Enable] (Default)
  False alarm due to a fog or snow can be reduced with balanced high detection ability.

  [Enhanced]
  Reduction of erroneous reports due to a fog or snow can be maximized. It may result in a longer response time.
  In addition, detection may fail under certain environments.

• **Sensitivity**
Can be set from the options, H (High), M (Medium), L (Low), or Custom (Enter required response time).

[Indoor mode] (Default M: 150 ms, H: 75ms, L: 500 ms)
Custom: Can be set from 75 to 900,000 ms (15 min.)

[Outdoor mode] (Default M: 150 ms, H: 75 ms, L: 500 ms)
Custom: Can be set from 75 to 900,000 ms (15 min.)

[Indoor high resolution mode] (Default M: 200 ms, H: 100 ms, L: 500 ms)
Custom: Can be set 100 to 900,000 ms (15 min.)

[Indoor throw-in mode]
Fixed to 0 ms. every scan report alarm.

• **Minimum Target Size (Width)**
Enter a width of an object to be detected.
(Default value depends on detection mode)

[Indoor mode] (Default: 150 mm (6 inch))
Enter 10 to 1,000 mm (0.4 to 40 inch)

[Outdoor mode] (Default: 250 mm (10 inch))
Enter 10 to 1,000 mm (0.4 to 40 inch)

[Indoor high resolution mode] (Default: 50 mm (2 inch))
Enter 10 to 1,000 mm (0.4 to 40 inch)

[Indoor throw-in mode] (Default: 150 mm (6 inch))
Enter 10 to 1,000 mm (0.4 to 40 inch)

Detectable range based on a target size
When configuring a target size smaller than 200 mm (8 inch), a distance to detect an object with the size gets shorter.

Indoor/Outdoor/Indor throw-in mode		
Target size	Black plate	White plate
25 mm (1 in.)	-	-
50 mm (2 in.)	4.0 m (13 ft.)	5.0 m (16 ft.)
100 mm (4 in.)	7.8 m (26 ft.)	8.8 m (29 ft.)
150 mm (6 in.)	11.4 m (37 ft.)	12.6 m (41 ft.)
200 mm (8 in.)	15.0 m (49 ft.)	16.4 m (54 ft.)
300 mm (12 in.)	21.0 m (69 ft.)	23.4 m (77 ft.)

Indoor high resolution mode		
Target size	Black plate	White plate
25 mm (1 in.)	4.4 m (14 ft.)	5.4 m (18 ft.)
50 mm (2 in.)	6.9 m (23 ft.)	8.9 m (29 ft.)
100 mm (4 in.)	12.6 m (41 ft.)	15.8 m (52 ft.)
150 mm (6 in.)	17.6 m (58 ft.)	22.0 m (72 ft.)
200 mm (8 in.)	22.0 m (72 ft.)	28.0 m (92 ft.)
300 mm (12 in.)	-	-

* Reflectivity of Black plate: 10%
* Reflectivity of White plate: 90%
* Detectable range depends on the reflectivity of target and its shape.
Need to confirm the detectable range with actual target at the installation location.

• **Target height for vertical area :** Default 250 mm (10 inch.)
Enter 1 to 1,000 mm (0.04 to 40 inch)

• **Non-Detection zone for vertical area**
Default : Indoor / Indoor high resolution / Indoor throw-in mode 0.1m (0.3 ft),
Outdoor mode 1.5 m (5 ft)

In a vertical detection area, protruding objects on the ceiling can be excluded from the detection area by disabling the upper part of the area by a specified distance.
Enter a desired length to disable.
The width is narrowed by a specified distance from the front direction from the main unit.

• **Detection Range 1 Default : 20 m (65 ft.), 1 to 20 m (3.3 to 65 ft.)**
For a vertical detection area, enter a length of an area to be detected. For a horizontal detection area, enter a width of an area to be detected.

• **Detection Range 2 Default : 20 m (65 ft.), 1 to 20 m (3.3 to 65 ft.)**
For a vertical detection area, enter a height of an area to be detected. For a horizontal detection area, enter a depth of an area to be detected.

• **Offset Default : 100 mm (4 inch.), 0 to 1,000 mm (0 to 39 inch.)**
For a vertical detection area, reflection from the ground or floor can generate noise for the detector. Also, plants and small animals can cause a false alarm.
An offset can exclude a detection area by a specified distance from the ground or floor.

6-3 NETWORK CONFIGURATION

The unit's main communication port can be configured.

• **Network Configuration of Main Ethernet Port**
Configuration Type: Default “STATIC”
Select “STATIC” or “DHCP”
IP address : Default 192.168.0.126
Subnet Mask : Default 255.255.255.0
Default gateway : Default 192.168.0.1
MTU : 1500

• **Network Configuration of Maintenance Port**
IP address : Default 192.168.1.126
Subnet Mask : Default 255.255.255.0

• **Event Code Configuration**
[Transmission Mode] : Can be select from the following option
UDP-Broadcast, UDP-Unicast, TCP, UDP-Broadcast & TCP and UDP-Unicast & TCP

[Heartbeat for Device Monitoring] : Can transmit a device monitoring code to external devices for alive monitoring (Default : Off)

[Destination IP Address and Port number]
UDP IP Address : Default 192.168.0.1
Port Number : Default 1234
TCP IP Address : Default 192.168.0.1
Port Number : Default 1234

[Connection test] : Can confirm the connection to the destination IP address and port number.

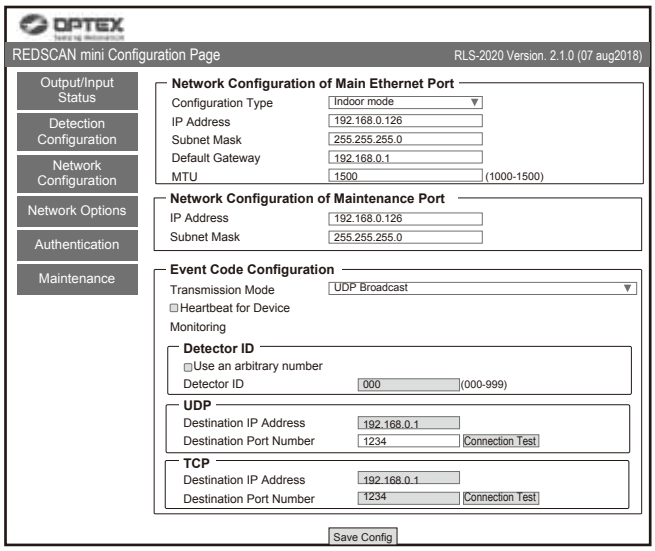

6-4 NETWORK OPTIONS

You can configure multiple advanced network protocol options.
Consult your network system administrator when you use these options.

• **Web Server Configuration**
Configure Web Server details.

• **SNMP Configuration**
Configure SNMP details.

• **Discovery**
Enable/Disable WsDiscovery.

• **DNS Configuration**
Configure DNS details.

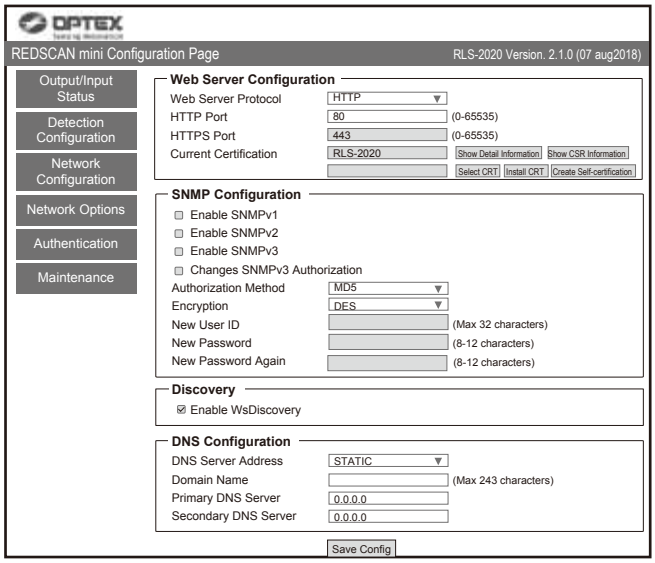

6-5 AUTHENTICATION

IDs and passwords can be changed.

• **Change authentication**
[New user ID] Default : REDSCAN
[New password] Default : OPTEX

To reflect the setting, press [Save Config] button to send and save the setting to the detector.
When losing the ID and password, the detector must be initialized.
(Refer to 5-8 Initialization to factory default.)

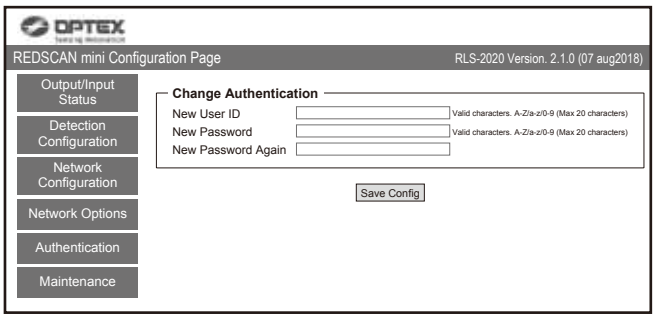

Note >>
For further setting changes (Detection area shape, Area selection and Input/Ouputs configuration), the optional setup software, Redscan Manager Software can be used.

6-6 MAINTENANCE

- **Update software**
  Can update the firmware of the unit. If necessary, click Choose File button to select the firmware file, and push Update button.

- **MAC address**
  Shows MAC addresses for Main Ethernet Port and Maintenance Port.

- **License**
  Click to show licenses of free open source software.

- **Reboot**
  Can reboot the unit.

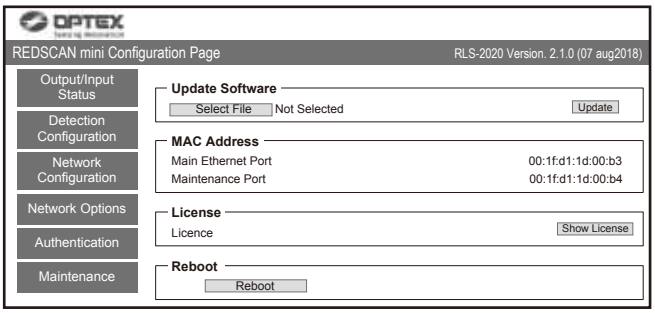

6-7 REDWALL EVENT CODE (R.E.C.)

< Purpose >
RLS-2020 generates original ASCII event codes which can be used by an NVR or VMS software to control PTZ cameras and other devices.

< Communication methods >
REDWALL EVENT CODE can be sent to the assigned port using UDP or TCP protocol. The default port number is “1234”.

< Code format >

“RLS126 MO A1 AA CC DQ AR AM TR SO TA”

ID number of the RLS-2020 — Y1 Master alarm — Y2 Latest alarm — Y3 Multiple alarm — Y4 Multiple alarm — ..... — Y10 Tamper

ID number of the RLS-2020 unit consist 6 bytes as follows.
RLS + 3 bytes number (Default number is the last group of the host IP address.)

Position	Command	Description
Y1	MO/CL	Any alarm zone are triggered, Master alarm code, "MO" code is generated. And, "CL" code is generated 10 seconds after master alarm was cleared. The time can be changed by setting software.
Y2	A1/A2 /B1/B2	Latest alarm.
Y3	AA-BB, EA-EB,AL	It shows detected areas by 11 patterns. *
Y4	CC	Multiple alarm. CC means that there are multiple detected areas.
Y5	DQ/dq	Environmental disqualification circuit activates / Environmental disqualification circuit status is restored.
Y6	AR/ar	Anti-rotation function activates / Anti-rotation status is resotred.
Y7	AM/am	Anti-masking function activates / Anti-masking status is restored.
Y8	TR/tr	Trouble condition / Trouble condition restored.
Y9	SO/so	Soiling on the laser window (Self checking function) / Soiling on the laser window status is restored.
Y10	TA/ta/DM	Tamper circuit activates/ Tamper circuit status is restored / “Heart beats” for device monitoring.

* Multiple alarm

R.E.C.	B2	B1	A1	A2
AA			✔	✔
BB	✔	✔		
BA	✔			✔
Ba	✔		✔	
bA		✔		✔
ba		✔	✔	

R.E.C.	B2	B1	A1	A2
EA	✔	✔	✔	
Ea	✔	✔		✔
Eb	✔		✔	✔
EB		✔	✔	✔
AL	✔	✔	✔	✔

Note >>
Contact to OPTEX to get more detailed specifications of REDWALL Event Code.

7 DIMENSIONS

7-1 DIMENSIONS

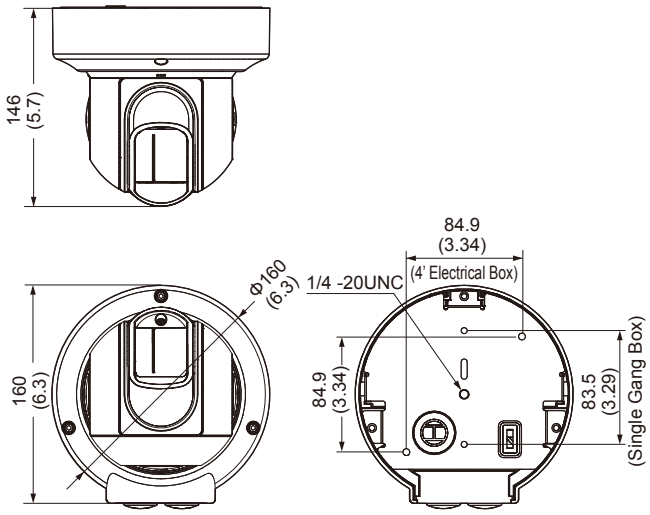

Unit: mm (inch)

8 SPECIFICATIONS

8-1 SPECIFICATIONS

Model	RLS-2020I	RLS-2020S
Installation location	Indoor	Indoor/Outdoor
Detection method	Infrared Laser Scan	
Laser protection class	Class 1	
Power input	10.5-30 VDC, PoE (IEEE 802.3af/at compliant)	
Current draw	500 mA max. (12 VDC), 250 mA max. (24 VDC), 6 W max. (PoE)	
Mounting method	Ceiling mount, Wall mount, Tripod mount, Pole mount (Option), Recess mount (Option)	
Detection area	20 ×20 m (approx. 65 ×65 ft.), 95 degree	
Detection range	Radius 1 to 21 m (approx. 3.3 to 68 ft.) at 10% reflectivity	
Detection resolution/ Response time	0.25 degrees / within 75 ms to 1 minute	0.25 degrees / within 25 ms to 1 minute 0.125 degrees / within 100 ms to 1 minute (for indoor high resolution mode)
Mounting height (Vertical mode)	2 m (6.7 ft.) or higher	Indoor: 2 m (6.7 ft.) or higher Outdoor: 4 m (13 ft.) or higher (Recommended)
Communication port	Ethernet RJ-45 10BASE-T/100BASE-TX (Auto negotiation)	
Protocol	TCP/IP, UDP/IP, DHCP, DNS, HTTP, HTTPS, FTP, SNMPv1/v2c/v3, ICMP, ARP	
Output	3 outputs, 28 VDC 0.2 A max. N.O./N.C. Selectable (3 from Master alarm, Zone alarm, Trouble, Tamper)	3 outputs, 28 VDC 0.2 A max. N.O./N.C. Selectable (3 from Master alarm, Zone alarm, Trouble, Tamper, DQ)
Input	—	1 Non-voltage contact input
Alarm period	Approx. 2 second delay timer	
Operating temperature	-40°C to 50°C degree (-40°F to 122°F degree) * Refer to UL statement on the end of page 11.	-40°C to 60°C degree (-40°F to 140°F degree) * Refer to UL statement on the end of page 11.
IP rating	IP66	
Dimensions (H×W×D)	146 ×160 ×160 mm (5.8 ×6.3 ×6.3 inch)	
Weight	1.0 kg (2.2 Lbs)	

* Specifications and design are subject to change without prior notice.

8-2 OPTIONS

LAC-1 : Laser area checker
RLS-PB : Pole mounting bracket
RLS-RB : Recessed mount kit
RLS-LW : REDSCAN mini laser window

UL Statement

- UL approved indoor mode and outdoor mode only.
  Indoor high resolution mode and Indoor throw-in mode has not evaluated by UL.
- In case of using DC power supply
  UL required the main unit to be connected to a UL listed power supply Class 2, capable of providing a norminal input of 10.5-30 VDC 500 mA and battery standby time of 4 hours.
- In case of using PoE injector or switch for power supply
  UL required the main unit to be connected to a UL listed PoE injector or switch and the PoE must be connected to a UL listed (UTRZ) UPS with output rating of 100-240 VAC, 1.0 A and 24 hours standby.
  UL testing was conducted with product powered from the following Listed POE:
  Manufacturer: PHIHONG, Model: POE36U-1AT-R, Input: 100-240 VAC, 1.0 A, Output: 56 V - 0.6 A
  UL approved the PoE connection as supplemental.
  The PoE cannot be used to monitor the device.
- For UL Listed installation applications
  The relay outputs shall be connected to a compatible UL Listed control panel.
  The signal input cannot be connected to alarm output to reduce the risk of false alarm.
  The equipment shall be installed in accordance with the National Electrical Code NFPA 70.
- UL testing was conduted at temperature range of
  0°C to 49°C for RLS-2020I, and -35°C to 66°C for RLS-2020S.

< MEMO >

Model/ Name	
Place	
Serial No.	
Date	
IP address/ Subnet mask/ Default gateway	
Output 1	
Output 2	
Output 3	
Input setting	
Mode/ Parameter/ Others	

9 APPENDIX

9-1 REPAINTING

1 Remove the side cover cap, side cover L and side cover Ss. (refer to 2-2 1)

2 Remove the front cover. (refer to 3-1)

3 Remove the base cover. (refer to 2-2 2 3 4)

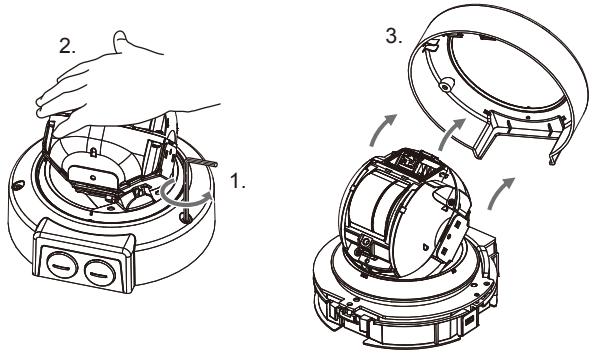

Note >>
Be careful not to lose the removed washer.

4 Paint the following parts. (refer to ✔ marks as follows)
Use the suitable paint for poly-carbonate resin.

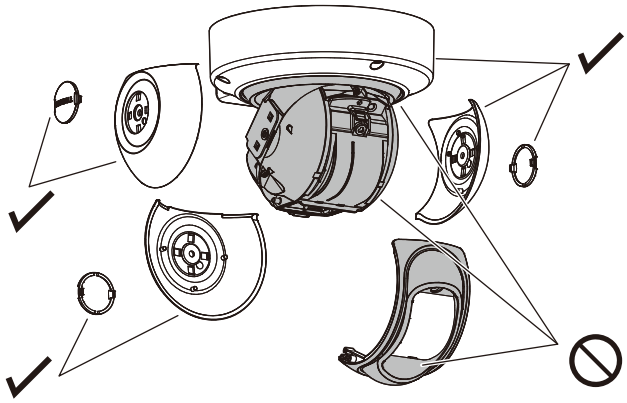

Note >>
Do not paint the front cover, the laser window or the base unit.
Painting the RLS-2020 S a dark color could raise the internal temperature and cause a malfunction.
Painting should be avoided if there is any possibility that the unit would be exposed to direct sunlight.

EN 50131-1 Grades and Environmental Class:
Security Grade 3, Environment ClassII TS50131-2-11

■ **EU contact information**

Manufacturer:
OPTEX CO., LTD.
5-8-12 Ogoto, Otsu, Shiga,
520-0101 JAPAN

Authorised representative in Europe:
OPTEX (EUROPE) LTD./EMEA HEADQUARTERS
Unit 13, Cordwallis Park, Clivemont Road,
Maidenhead Berkshire, SL6 7BU U.K.

OPTEX CO., LTD. (JAPAN)
URL: www.optex.net

OPTEX INC./AMERICAS HQ (U.S.)
URL: www.optexamerica.com

OPTEX (EUROPE) LTD./EMEA HQ (U.K.)
URL: www.optex-europe.com

OPTEX TECHNOLOGIES B.V. (The Netherlands)
URL: www.optex.eu

OPTEX SECURITY SAS (France)
URL: www.optex-security.com

OPTEX SECURITY Sp.z o.o. (Poland)
URL: www.optex.com.pl

OPTEX PINNACLE INDIA, PVT., LTD. (India)
URL: www.optex.net/in/en/sec

OPTEX KOREA CO.,LTD. (Korea)
URL: www.optexkorea.com

OPTEX (DONGGUAN) CO.,LTD. SHANGHAI OFFICE (China)
URL: www.optexchina.com

OPTEX (Thailand) CO., LTD. (Thailand)
URL: www.optex.net/th/th